U.S. NAVAL RESEARCH LABORATORY

Preparations for Thrust Measurement and Error Analysis of the IMPULSE Resonant Microwave Cavity

Advanced Propulsion Workshop
Aerospace Corporation
El Segundo, CA

Michael McDonald, Logan Williams and Michael Nurnberger
Naval Center for Space Technology
Propulsion Section
Washington, D.C.

November 2, 2017

U.S. NAVAL RESEARCH LABORATORY

Outline

- Program Overview
- NRL Experimental Equipment
- Overall Experimental Plans
- Initial Thermal Test Results
- Conclusions

U.S. NAVAL RESEARCH LABORATORY

Naval Research Laboratory (NRL)

Component Development

System Design

Propulsion Integration & Test

NRL is a $1B organization employing over 1600 S&Es, over 50% PhDs, conducting basic and applied research spanning the depths of the ocean to the far reaches of space

The Naval Center for Space Technology at NRL is a spacecraft subsystem specialist with over 300 federal employees, a dedicated ground station, and a history of over 100 launches in the last 50 years

Propellant Loading Operations

Launch Integration

Flight Operations

IMPULSE Program Overview

In-Depth Measurement of Performance in Unconventional Low-thrust Spacecraft Engines

Motivation

- Propulsion reaction mass limits all satellite operating envelopes
- NASA testing measured ~90 uN at 80 W RF power *with no apparent propellant* from a resonant microwave cavity
  - Test results are peer-reviewed
  - Thermal drift and other potential errors require independent verification & validation (IV&V)

Objectives for NRL testing

- Replicate NASA cavity geometry w/independent cavity design and RF feed system
- Meet/exceed published RF forward power levels (80 W)
- Operate at thermal steady state to minimize thermal drift

Peer-reviewed results from NASA vacuum tests of a resonant microwave cavity…

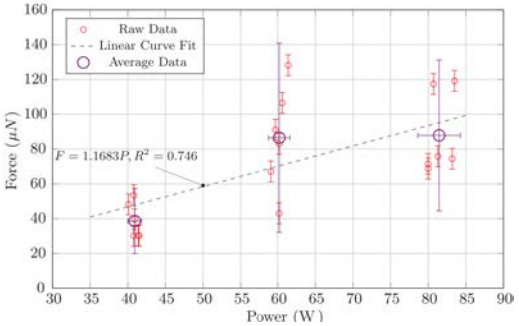

…reported a propellantless thrust of order 1-2 μN/W (mN/kW)[1]

[1] H. White et. al., AIAA J. of Prop. & Power, Dec. 2016

NRL Experimental Equipment Overview

- Torsional Thrust Stand: <3 µN resolution
  - Excellent seismic isolation achieved w/commercial dampers
  - NASA cavity footprint large but feasible
- NRL Resonant Cavity Test Article:
  - Replicates NASA critical dimensions
  - Independent NRL mechanical, RF design
  - Quality factor >16,000 at 1.9 GHz
- Vacuum Facility: South Chamber
  - 2.5 m diameter x 4m tall chamber
  - ~20,000 L/s diffusion pump
  - Base pressure ~10^{-6} Torr
- RF Circuitry
  - Up to 150W from 0.7-2.5 GHz
    - Design point: 500W
  - Closed-loop resonant feedback control
  - Custom noncontact joint at torsional pivot

NRL's resonant cavity, Q=16,500 at 1.88 GHz

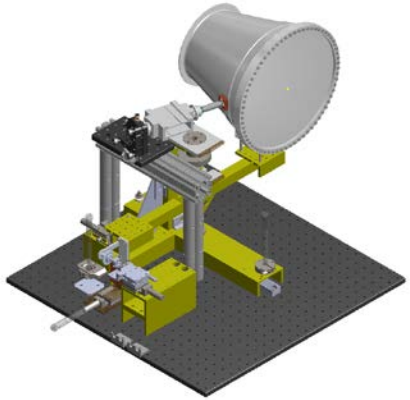

Top view, NRL cavity on torsional thrust stand

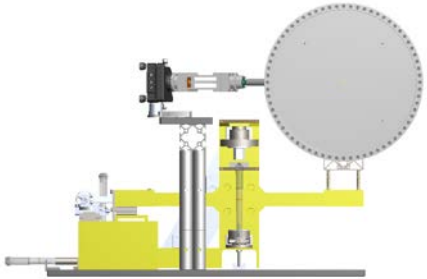

Front view, NRL cavity on torsional thrust stand

NRL Experimental Equipment: Thrust Stand

- The NRL torsional thrust stand is a semi-custom commercial product from Busek
  - Purchased 2013 w/NRL collaboration in design
  - Heavily optimized at NRL for high resolution, low-noise operation
  - 2-5 µN noise floor driven by ambient facility vibration
- Uses stock commercial pivot bearings (Riverhawk Flex Pivots)
  - Support thruster mass to 45 kg
  - ~15 µN force / µm displacement
- Clamps pass wires onto torsional arm
- Laser displacement sensor and capacitive force generator (CFG) allow in-situ calibration
- Magnetic eddy current dampers reduce oscillation
- Vertical actuators maintain inclination control

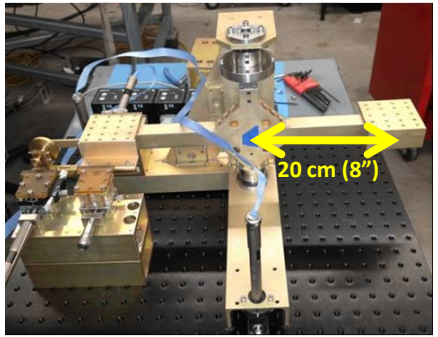

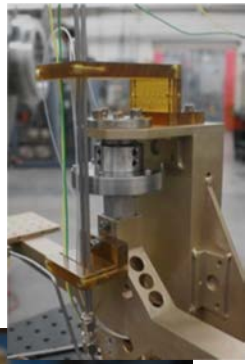

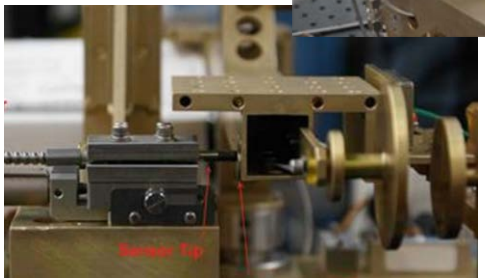

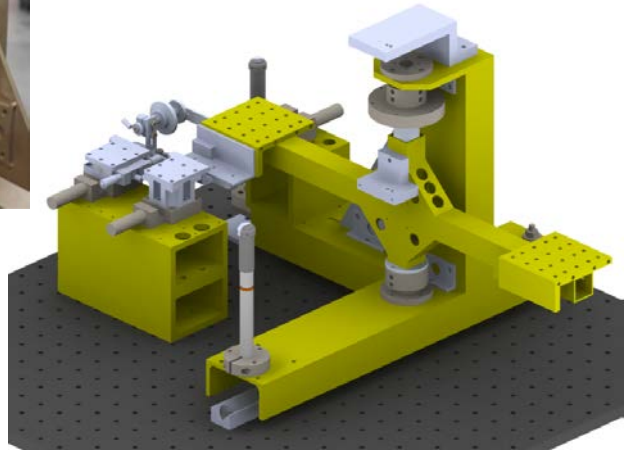

NRL Experimental Equipment: Resonant Cavity

- Resonance Features
  - Internal dimensions reproduce NASA values
  - 11” x 6.25” x 9” (large OD x small OD x length)
  - Q = 16430 at 1.88 GHz
    - measured w/o dielectric
- Construction
  - Two-piece assembly, lid + bucket
  - CNC-lathed Al body w/.001” Cu plating
  - Total weight ~7 lbs + optional polymer insert
- RF feed positioned for versatility
  - Can excite either TE or TM modes as desired
  - Vent holes lie in the current nulls of the 212 mode

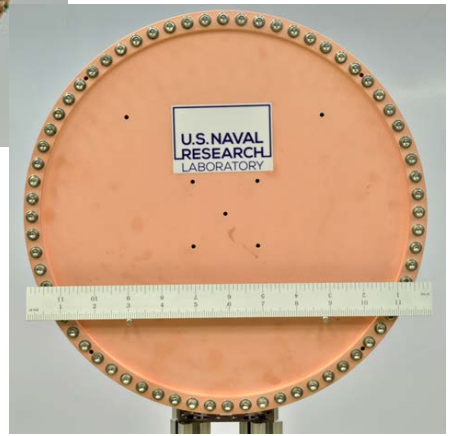

NRL Experimental Equipment: Noncontact RF Joint (1) - Stripline Basics

High-power RF on a thrust stand is hard for (at least) two reasons:

- Inefficient RF power generation; losses >75% are common
  - In vacuum waste heat is hard to shed, limiting max power
  - Keeping the RF source at atmosphere would be easier
- High-power RF cables are relatively rigid and heat up
  - This dampens sensitivity and increases thermal drift
  - Alternative: perform DC-RF conversion on thrust stand

This motivates a non-contact RF joint

- Stripline geometry is attractive for low leakage, free torsional motion
- Axial split fingers with nominal λ/4 overlap permit resonant transmission at $f = f_{crit}$
- Wide bandwidth possible with finger overlap for capacitive coupling
  - few in.^{2} for f_{low} ~ 700 MHz at cavity fundamental

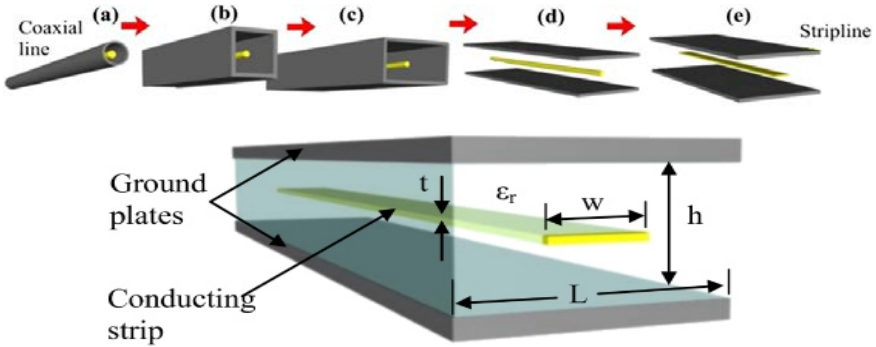

The stripline geometry is a split and flattened evolution of a coaxial transmission line[1]

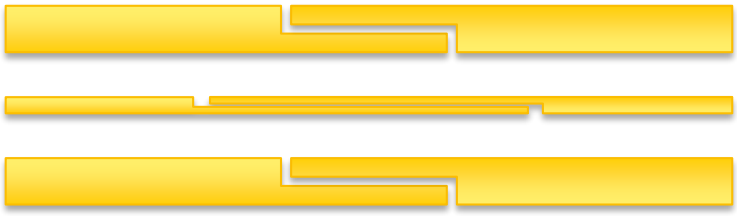

In the NRL finger joint the stripline is split into axially overlapping fingers with approximate length λ/4 and large overlap area

[1] Stripline evolution figure from J Pollak et al 2007 Plasma Sources Sci. Technol. 16 310 doi:10.1088/0963-0252/16/2/014

NRL Experimental Equipment: Noncontact RF Joint (2)

- Sized for high power (500 W) at 2 GHz with <0.05% radiated power
  - Large ground planes and symmetric structure minimize radiation
  - Internal geometry reduces reflection losses
  - Measured Γ <-25 dB from 0.7 – 2.5 GHz
- Multipactor discharge concerns mitigated
  - Conductor spacings sized for our power levels w/margin
  - Metal components roughened and iridited to reduce discharge risk
  - Monitoring circuit in RF feed detects multipaction
- Successfully tested with dummy load in vacuum to 100 W power level
  - +23 dB forward-reverse power differential (including all cabling and the load itself)

NRL's frictionless noncontact RF power connection has a <1 mm gap between "fingers". The joint provides high power and bandwidth throughput with no stiff RF cable on the thrust stand required

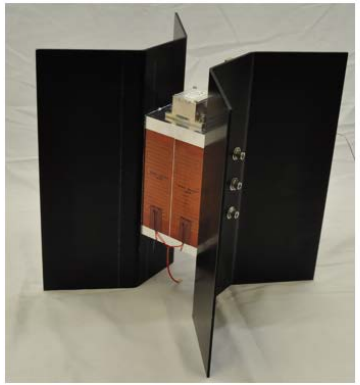

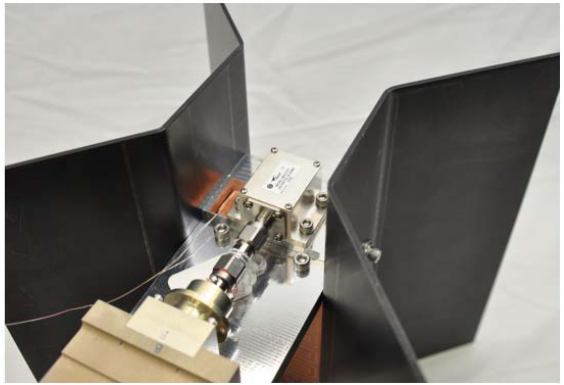

NRL Experimental Equipment: Full Thrust Stand Test Configuration

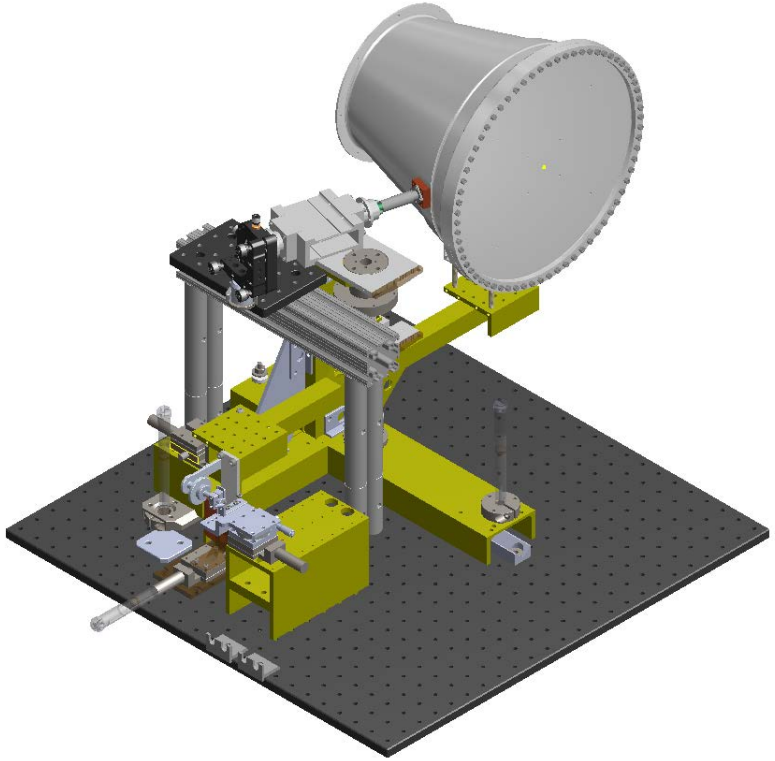

A mezzanine level with a 5-DOF micrometer stage positions the stationary half of the noncontact joint to power the resonant cavity

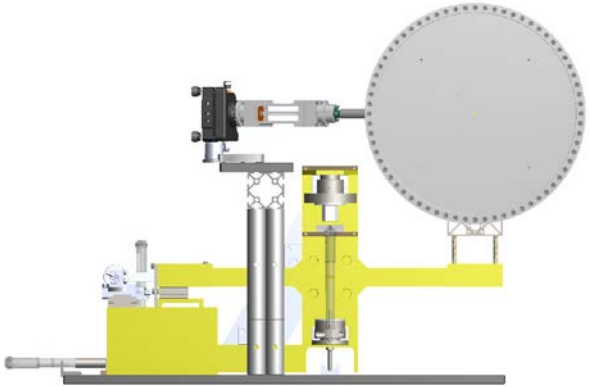

Front view: cavity test configuration and noncontact joint

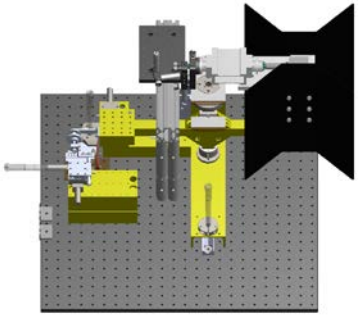

Above front view: dummy load test configuration and noncontact joint

NRL Experimental Equipment: RF Feedback Control Circuit

Why use closed-loop feedback control?

- Highly resonant cavities are thermally unstable
- RF power dissipates as Ohmic heating in the cavity walls
- The cavity thermally expands, dropping resonant frequency f_{res}
- Feedback tracks resonance bandwidth $\Delta f/f_{res} = 1/Q$
  - For Q~10,000, $\Delta f/f_{res} \sim 10^{-4}$
  - *Aluminum expands this much every 5° C!*

How is it implemented?

- LabView control loop ~ 1 kHz
  - Coarse initial tuning +/- 1 MHz
  - Fine continuous tuning at ~5-10 kHz
- Converges to near-zero reflected power <1 sec

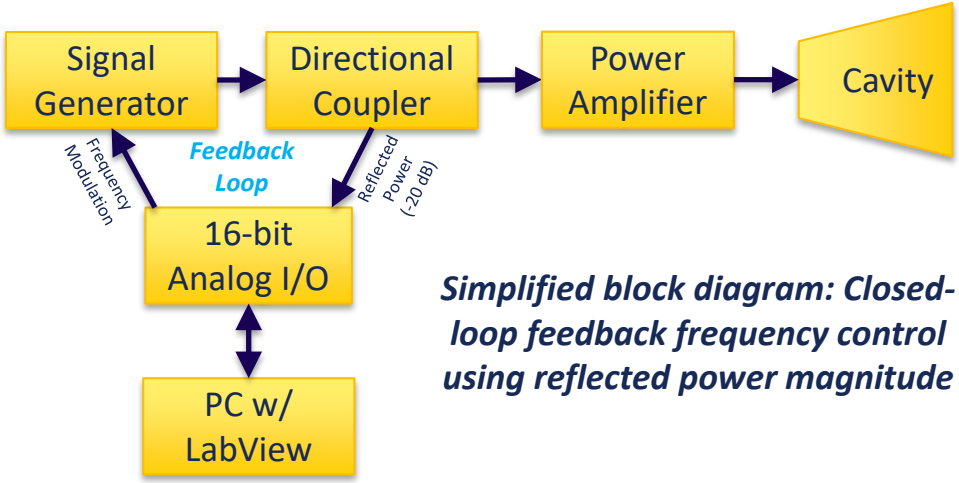

Simplified block diagram: Closed-loop feedback frequency control using reflected power magnitude

NRL Test Goals and Actions

Primary Goals:

- Operate at RF forward power level ≥80 W
- Operate at thermal steady state
- Identify thermal drift and outgassing thrust effects

NRL Actions:

- To reduce total thermal load:
  - Place RF source outside vacuum chamber to aid cooling
- To reduce thermal drift:
  - Use noncontact RF connection to prevent RF cable thermal expansion
  - Stabilize thrust stand at 50 C w/resistive heaters and PID control
  - Pre- and post-heat cavity w/resistive heaters to match RF thermal load
  - Operate on RF power to thermal steady state
  - Use solid state relay on arm to short cavity heaters during RF testing
- To monitor RF effects:
  - Test w/RF dummy load and noncontact joint at similar RF power, temperature
  - Test cavity w/o polymer insert as this is presumed critical for anomalous thrust
  - Ultimately, test cavity w/insert normal to thrust axis

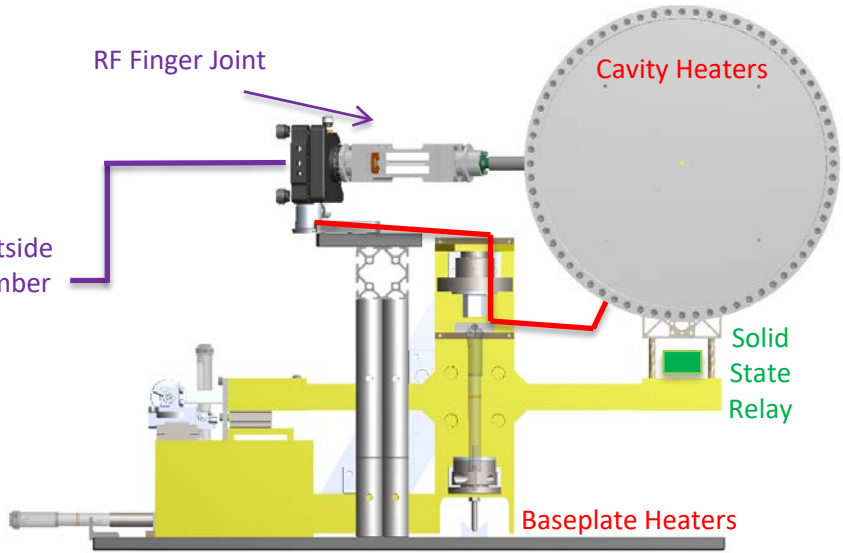

Initial Thermal Testing: Black Cavity Resistive Heating

- Black high-emissivity coating increased permissible steady state power from <10 W to >80 W
- Max power set by self-imposed temperature ceiling of 100 C for resistive heater adhesive
- Thermal equilibration times of a few hours
- Approximately 30 °C temperature spread across cavity under resistive heating

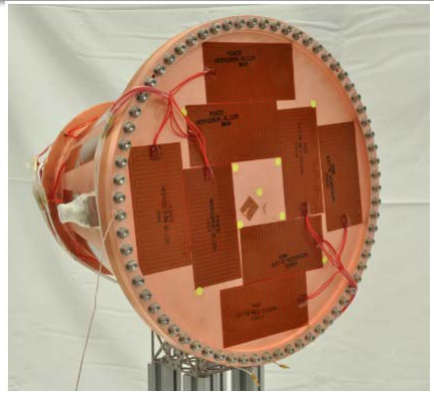

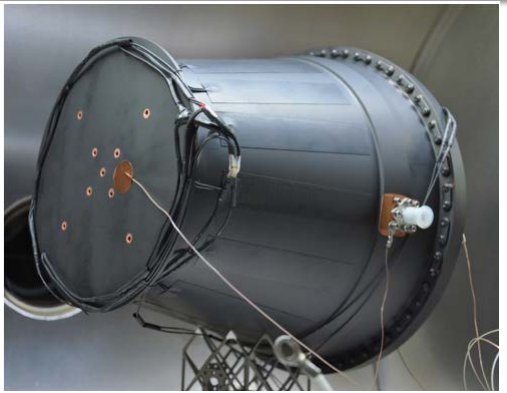

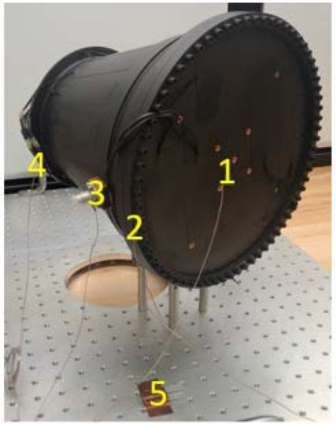

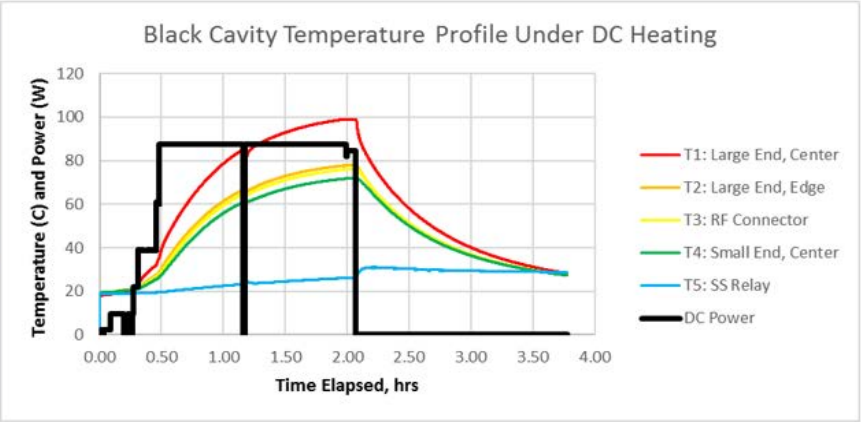

Initial Thermal Testing: Black Cavity RF Heating

- Matched power ~85 W produces lower overall temperature, tighter temp spread
  - Peak temp ~90 °C, min temp ~77 °C
  - Matching cavity temperature with resistive pre-heating will require imperfect choice of reference location to match
- Slightly longer thermal equilibration times, but still of order few hours
- Demonstrates stable resonant frequency tracking over several hours a ΔT ~ 70 °C

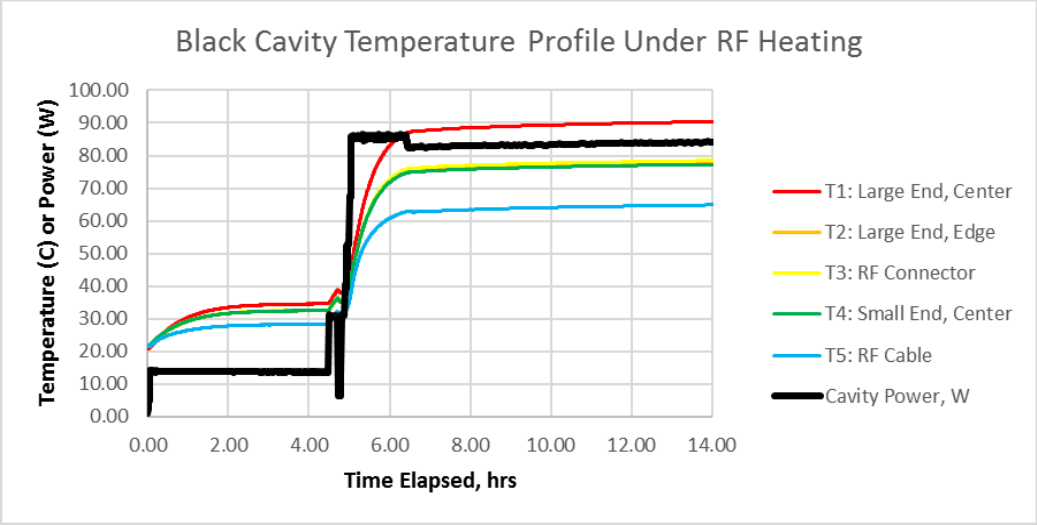

U.S. NAVAL RESEARCH LABORATORY

Conclusions

- NRL is engaged in an IV&V effort examining recent reports of anomalous thrust production ("propellantless propulsion") in a resonant microwave cavity
- We have fabricated a resonant cavity and begun initial thermal testing
  - Cavity Q>16000
  - Anticipated initial power levels up to 100 W
- We have developed a new noncontact wideband RF power transmission joint, the "finger joint"
  - Measured loss <-25 dB from 0.7 – 2.5 GHz
- We anticipate testing at thermal steady state
  - RF source placed outside the vacuum chamber
  - Resistive heaters to provide pre- and post-heating to minimize ΔT due to RF power
- We are agnostic on the physical mechanism at play in these devices pending more reliable data to quantify and rule out errors

Naval Research Laboratory (NRL)

Component Development

System Design

Propulsion Integration & Test

NRL is a $1B organization employing over 1600 S&Es, over 50% PhDs, conducting basic and applied research spanning the depths of the ocean to the far reaches of space

The Naval Center for Space Technology at NRL is a spacecraft subsystem specialist with over 300 federal employees, a dedicated ground station, and a history of over 100 launches in the last 50 years

Propellant Loading Operations

Launch Integration

Flight Operations